ITEM	PARTS NAME	Q'TY	MATERIAL	FINISH/REMARK
1	SHELL	1	STAINLESS	NI: 50u"
2	Molding HOUSING	2	L.C.P	(Black)
3	GND SPRING	2	STAINLESS	NI: 50u"
4	Insert molding 12PIN	2	L.C.P	(Black)
5	CONTACT	24	COPPER ALLOY	Contact area: gold flash, Solder tails: Tin100u", Ni: 50u"
6	LATCH	1	STAINLESS	NI: 50u"
7	SHELL COVER	1	HIGH CARBON STEEL	NI: 50u"

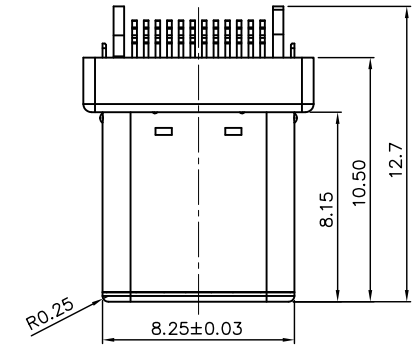

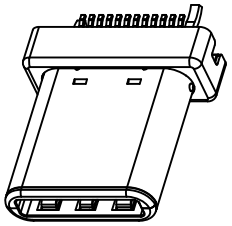

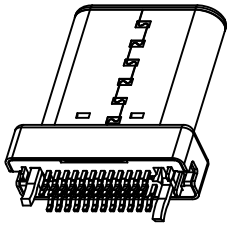

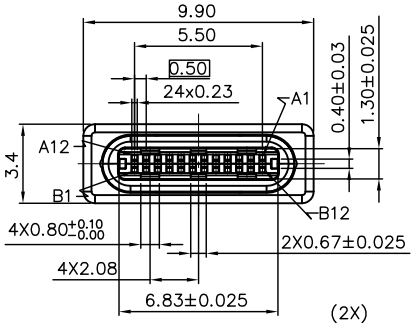

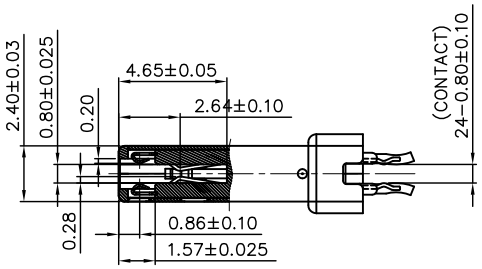

Pin Number	host	device	Pin Number	host	device
Pin A1	GND	GND	Pin B12	GND	GND
Pin A2	SSTxp1	SSTxp1	Pin B11	SSRxp1	SSRxp1
Pin A3	SSTxn1	SSTxn1	Pin B10	SSRxn1	SSRxn1
Pin A4	VBUS	VBUS	Pin B9	VBUS	VBUS
Pin A5	CC1	CC1	Pin B8	SBU2	SBU2
Pin A6	DP1	DP1	Pin B7		
Pin A7	DN1	DN1	Pin B6		
Pin A8	SBU1	SBU1	Pin B5	CC2	CC2
Pin A9	VBUS	VBUS	Pin B4	VBUS	VBUS
Pin A10	SSRxn2	SSRxn2	Pin B3	SSTxn2	SSTxn2
Pin A11	SSRxp2	SSRxp2	Pin B2	SSTxp2	SSTxp2
Pin A12	GND	GND	Pin B1	GND	GND

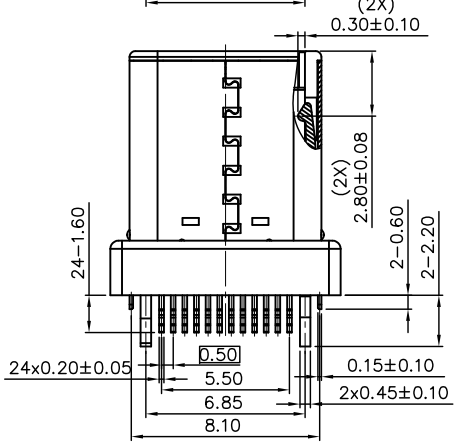

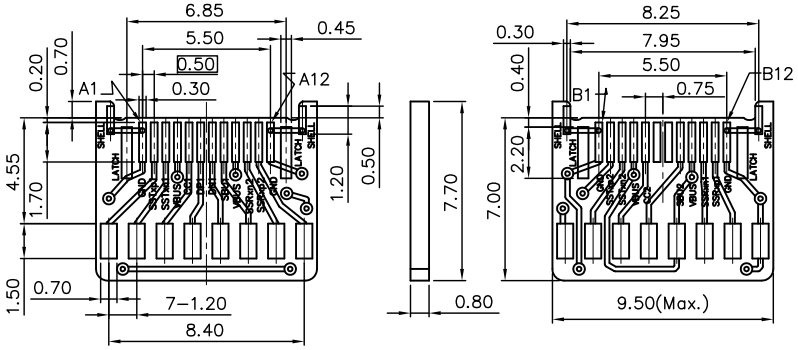

RECOMMENDED P.C.B LAYOUT
ALL TOLERANCE ±0.05mm

SYM	DISCRIPTION	DATE	APPROVED
△			
△			
△			
△			
△			

TACLEX *TACLEX ELECTRONICS CO., LTD.*

TOLERANCES UNLESS OTHERWISE SPECIFIED
LINEAR: ±0.30 ANGULAR: ±3°

REVISIONS: A
SCALE: 5/1

SIGNATURES		DATE
DRAWN	Eric	2015.04.30
CHK'D	Andy	2015.04.30
APPV'D	Rex	2012.10.15

TITLE: USB TYPE C PLUG

NO. TUA-S91HMB-L1E