SSYE

MODEL NO.:
PJ-S32540-ABK7AU03L-RH
(1) (2) (3) (4)(5) (6)
(1) Series no.
(2) Schematic type: A,B,C
(3) Housing color:
BK7=Black
(4) Terminal plating:
AU03=Plating AU 3u" min.
(5) Packing mode:L=Reel packing
(6) Environmental requirements:
Rh=RoHS 2.0 + Halogen Free

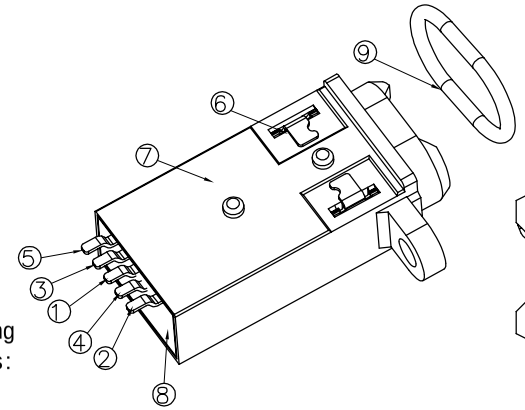

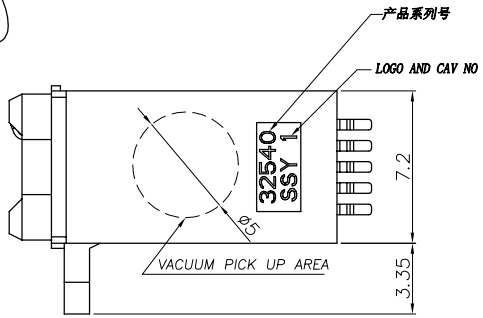

Matching Plug

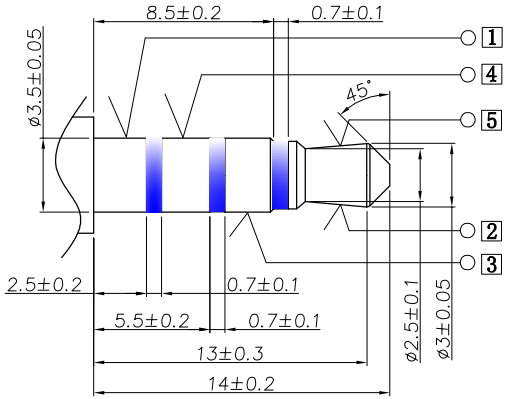

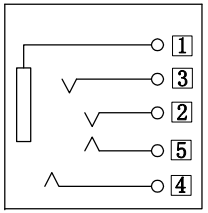

Circuit Diagram

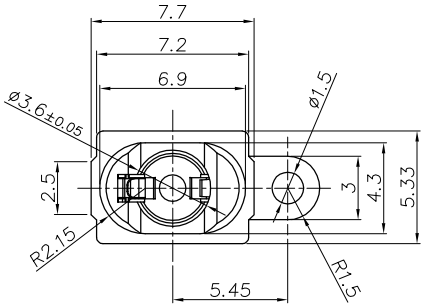

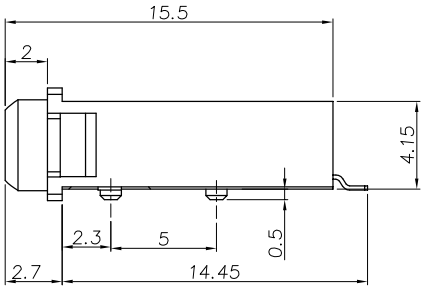

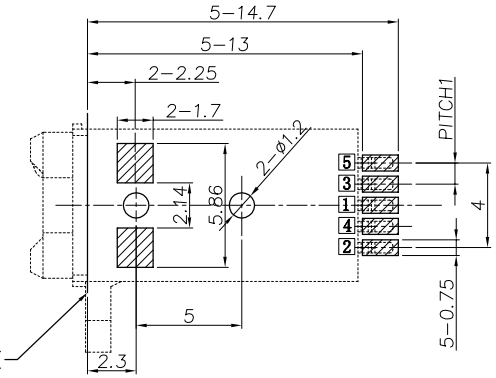

SPECIFICATION:
1.Electrical characteristics
1-1.Current rating:DC 0.5A max.
1-2:Voltage rating:DC 30V.
1-3:Contact resistance:50mΩ max
1-4.Insulation resistance:1000MΩ min. at 500V DC.
1-5.Withstanding voltage:500V AC for 1 minute.
2.Mechanical characteristics
2-1.Life test:5000 cycles min,
2-2.Mating force:3～30N,
Unmating force:3～30N.
3.Temperature range: -40° C~+80° C
4.Dustproof and waterproof grade: IP67
.

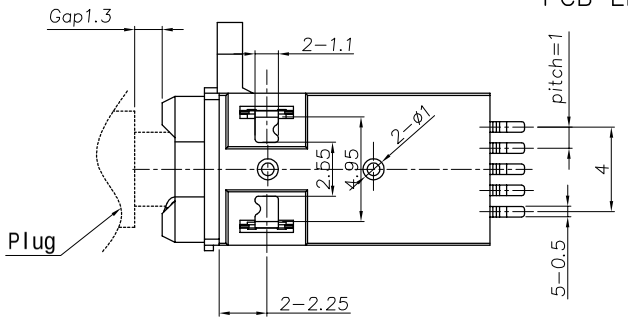

RECOMMENDED P.C.B LAYOUT
TOP VIEW (TOLRANCE: ±0.05)

NO.	DESCRIPTION	QTY	MATERIAL	REMARK
9	Rubber ring	1	Silica Gel	White
8	cover	1	HIGH TEMPERATURE PLASTIC	Black
7	Housing	1	HIGH TEMPERATURE PLASTIC	Black
6	Shunt	2	Phosphor bronze, 0.15t	3u"Au on Contact Area And Gold Flash On Other Area.
5	Tip spring 5	1	Phosphor bronze, 0.20t	
4	Ring spring 4	1	Phosphor bronze, 0.20t	
3	Ring spring 3	1	Phosphor bronze, 0.20t	
2	Tip spring 2	1	Phosphor bronze, 0.20t	
1	Earth spring 1	1	Phosphor bronze, 0.20t	

ECN NO.	REV	DATE	DESCRIPTION	CHANGE	APPRO.
	A-0	2014.03.12	NEW	李海鸥	余 军

GENERAL TOLERANCE UNLESS OTHERWISE NOTED	
Angle	±2°
10<L≤20	±0.3
5<L≤10	±0.25
L≤5	±0.20

DESIGN	李海鸥	2014.03.12
CHECK		
APPROVAL		

SCALE: 3:1 UNIT:mm A4 SHEET:1 of 1

TACLEX ELECTRONICS CO., LTD.

TITLE:	ø3.5mm PHONE JACK
MODEL NO.	PJ-S32540-ABK7AU03L-RH
FILE NO.	Q/SSY.QW-001A-0447

原始设计：李海鸥 承认：余 军 日期：2013.12.05