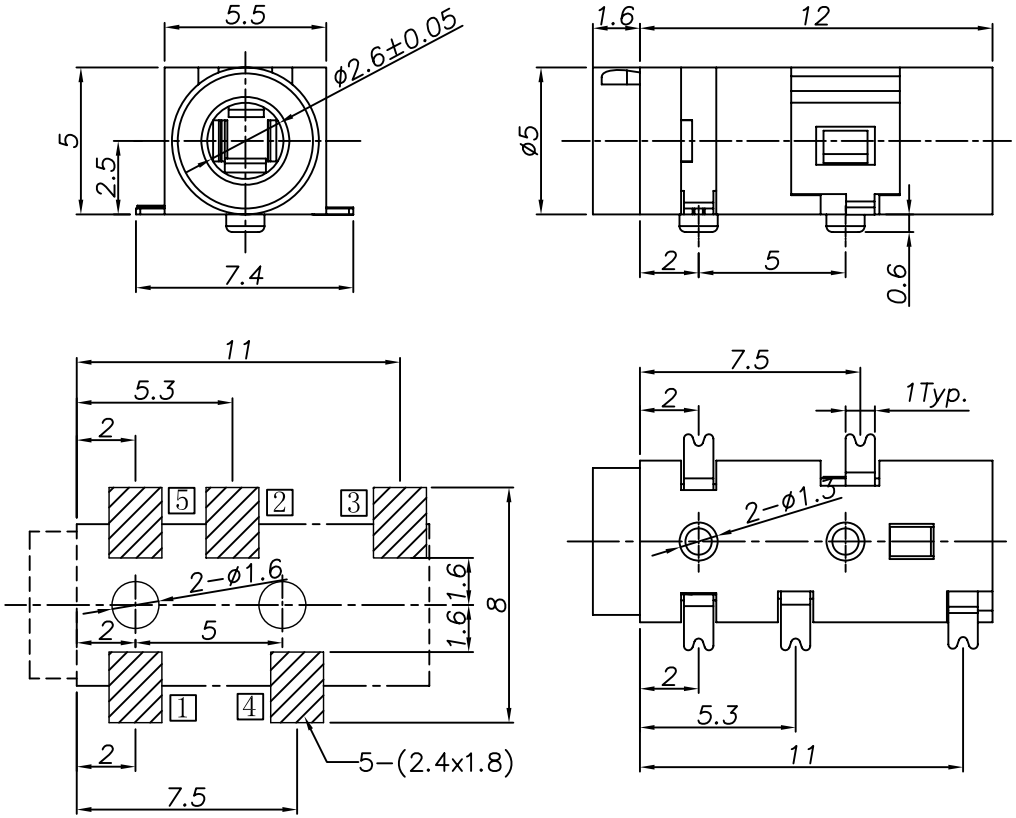

P.C.B Layout
(Copper-sided view)

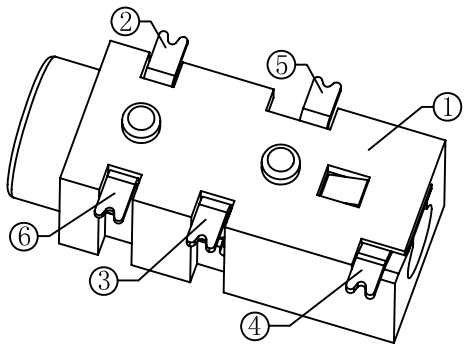

Ordering information:

TPJ-2A700 - □ □□ □□ □ □□ □
(1) (2) (3) (4) (5) (6) (7)

(1):Series No.
(2):Schematic option:S
(3):Material of housing:
9T=PA9T
(4):Bushing or Housing color:
0A=Black 2_=Red 3_=Orange
Zero 4_=Yellow 5_=Green 6_=Blue
(5):Terminal plating
S:Silver(Ag) T:Tin(Sn)
G:Gold(Au)
(6):Special option:
00:No special option
(7):Packing mode:
1:Tape reel packing
3:Plastic box packing
4:Bag packing

Model No.	TPJ-20700-S
Schematic	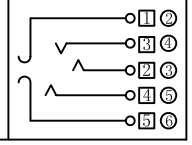

SPECIFICATION
1.Rating : DC 30V 0.5A;
2.Contact resistance: ≤50mΩ;
3.Insulation resistance: ≥100MΩ (DC250V);
4.Withstand voltage: 500VAC ;
5.Insertion and extraction force: 3-25N;
6.life test: 5000 cycles。

NO.	DESCRIPTION	QTY	MATERIAL	PART NO.	PLATING
⑥	Earth spring	1	C5210-EH T=0.2	PJ20610-05	Ag-Plating
⑤	Ring spring	1	C5210-EH T=0.25	PJ20610-04	Ag-Plating
④	Ring spring	1	SUS301 T=0.25	PJ20610-03	Ag-Plating
③	Tip spring	1	SUS301 T=0.3	PJ20610-02	Ag-Plating
②	Earth spring	1	C5210-EH T=0.2	PJ20610-01	Ag-Plating
①	Housing	1	PA9T,UL 94V-0	PJ20610-S1	Black

SYM	DISCRIPTION	DATE	APPROVED
△			
△			
△			
△			
△			

TACLEX TACLEX ELECTRONICS CO., LTD.

TOLERANCES UNLESS OTHERWISE SPECIFIED LINEAR: ±0.2 ANGULAR: ±3°			SIGNATURES		DATE	TITLE
			DRAWN	Andy	2008.10.27	EARPHONE JACK
REVISIONS A		SCALE 5/1	CHK'D	Alex	2008.10.27	NO. TPJ-2A700
			APPV'D	Rex	2008.10.27	