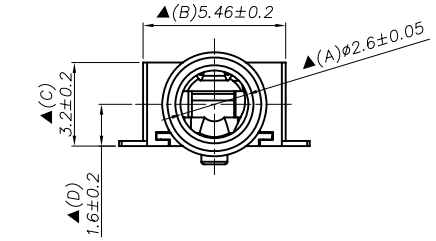

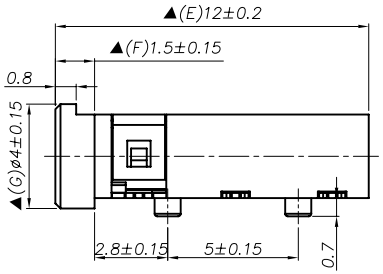

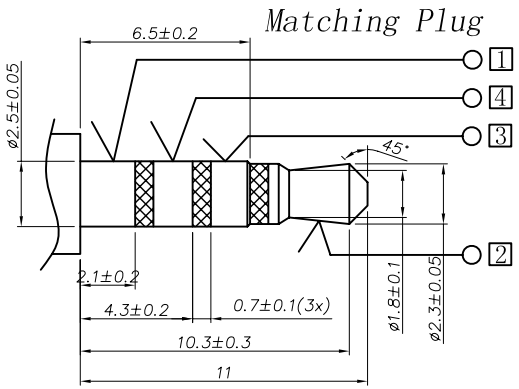

Ordering information:

TPJ-2A51E - □ 9T 0A G 00 1

(1) (2) (3) (4) (5) (6) (7)

(1):Series No.

(2):Schematic option:I, J, M, A, D

(3):Material of housing:
9T=PA9T

(4):Housing color:
Zero 0A=Black

(5):Terminal plating:
G=Gold(Au)

(6):Special option:
00=No special option

(7):Packing mode:
1=Tape reel packing

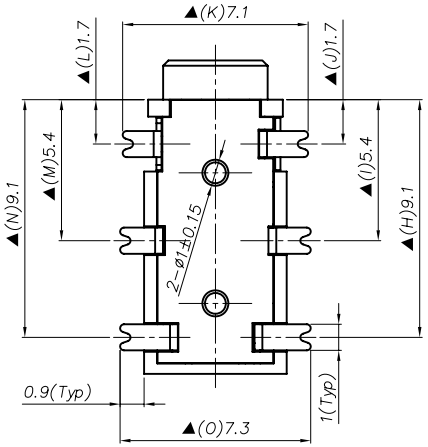

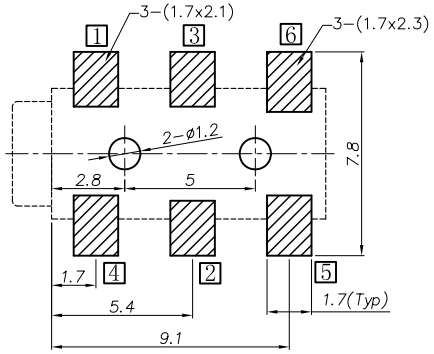

RECOMMENDED P.C.B. LAYOUT
UNSPECIFIED TOLERANCE:±0.05
(COPPER-SIDED VIEW)

Model No.	TPJ-2A51E-I	TPJ-2A51E-J	TPJ-2A51E-M	TPJ-2A51E-A	TPJ-2A51E-D
Schematic code	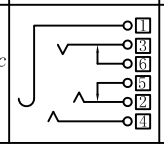	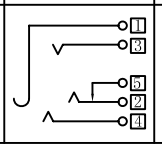	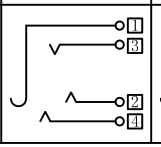	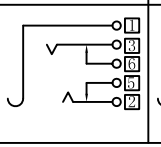	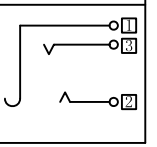

Specification:

1. Rating : DC 12V 1A;
2. Contact resistance: ≤50mΩ;
   After test:≤100mΩ
3. Insulation resistance: ≥100MΩ(500VDC);
   After test:≥50MΩ
4. Withstand voltage: 500VAC ;
5. Insertion and extraction force: 3N～25N;
6. life test: 5000cycles min;
7. Operation temperature range: -20℃～70℃;
8. Preservation temperature range: -40℃～85℃;
9. Sign"▲ "is importance dimension;

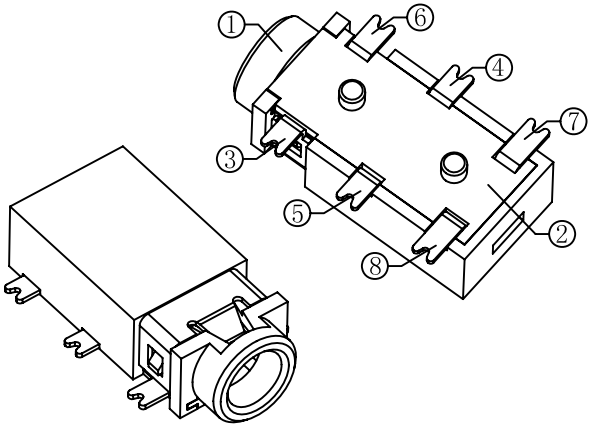

NO.	DESCRIPTION	QTY	MATERIAL	PART NO.⚠	PLATING
⑧	Shunt terminal 6	1	Phosphor bronze 0.2t	TPJ-2A51B-06	Gold flash
⑦	Shunt terminal 5	1	Phosphor bronze 0.2t	TPJ-2A51B-05	Gold flash
⑥	Ring spring 4	1	Phosphor bronze 0.2t	TPJ-2A51B-04	Gold flash
⑤	Ring spring 3	1	Beryllium bronze 0.2t	TPJ-2A51B-03	Gold flash
④	Tip spring 2	1	Beryllium bronze 0.2t	TPJ-2A51B-02	Gold flash
③	Earth spring 1	1	Stainless steel 0.2t	TPJ-2A51B-01	Gold flash
②	Cover	1	LCP,UL 94V-0	TPJ-2A51E-S2	
①	Housing	1	PA9T,UL 94V-0	TPJ-2A51B-S1	

SYM	DISCRIPTION	DATE	APPROVED
△			
△			
△			
△			
△			

TACLEX TACLEX ELECTRONICS CO., LTD.

TOLERANCES UNLESS OTHERWISE SPECIFIED LINEAR: ±0.2 ANGULAR: ±3°			SIGNATURES		DATE	TITLE
			DRAWN	Michael	2010.12.13	EARPHONE JACK
REVISIONS A		SCALE 5/1	CHK'D	Alex	2010.12.13	NO. TPJ-2A51E
			APPV'D	Rex	2010.12.13	