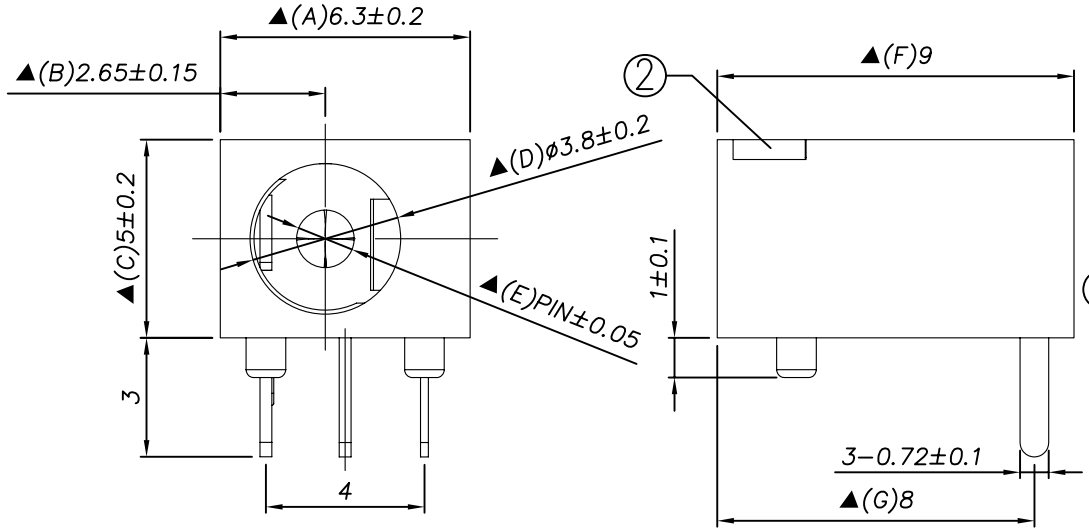

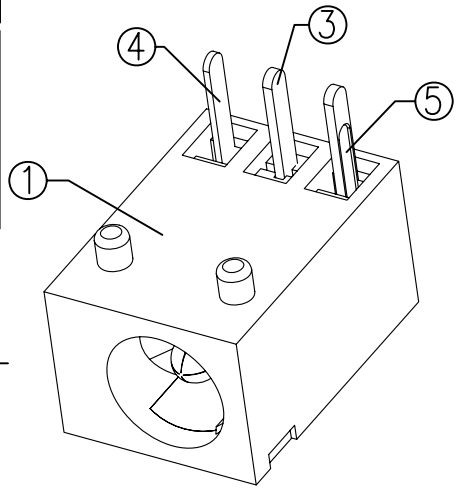

TDJ-A1940 - □ □ □□ 0A S 0 4

(1) (2) (3) (4) (5) (6) (7) (8) (9)

(1):Series type:DX=DC POWER JACK

(2):Series No.

(3):Schematic option: A ,B

(4):Center pin diameter:
C=Ø1.0 ,E=Ø1.3

(5):Material of housing:
PB=PBT ,66=PA66 ,9T=PA9T

(6):Housing color:
Zero — 0A=Black

(7):Terminal plating:
S=Silver(Ag)

(8):Special option:
0=No special option

(9):Packing mode:
4=Bag packing

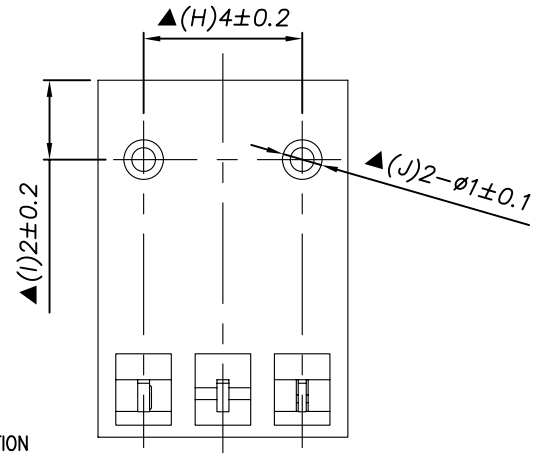

P.C.B Layout

(Copper-sided view)

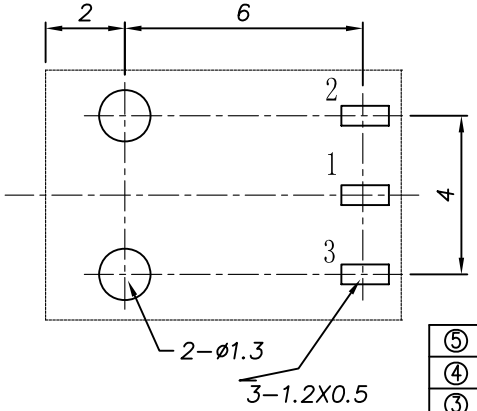

Model No.	TDJ-A1940-_C	TDJ-A1940-_E
PIN	ø1.0	ø1.3

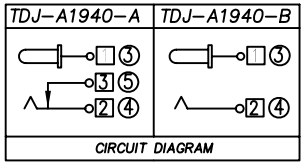

□ : TERMINAL NO. ○ : ITEM NO.

SPECIFICATION

1.Rating : DC 20V 2A;
2.Contact resistance: ≤50mΩ;
3.Insulation resistance: ≥100MΩ (DC500V);
4.Withstand voltage: 500VAC ;
5.Insertion and extraction force: 3-30N;
6.life test: 5,000 cycles;
7.Operation temperature range:-20°C~70°C;
8.Preservative temperature range:-40°C~85°C;
9.Sign"▲ "is importance dimension.

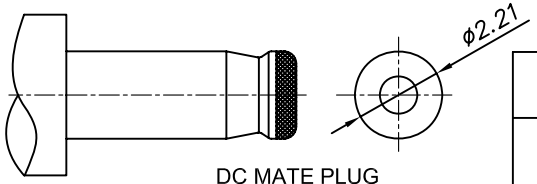

DC MATE PLUG

NO.	DESCRIPTION	QTY	MATERIAL	PART NO.	REMARK
⑤	Shunt terminal	1	Brass t=0.30	TDJ-A1940-03(WP-DC0005)	Silver-Plating
④	Tip spring	1	SUS301 t=0.2	TDJ-A1940-02(TP-DC0005)	Silver-Plating
③	Center pin	1	Brass t=0.3	TDJ-A1940-01C/E	Silver-Plating
②	Cover	1	PA66/PBT/PA9T	TDJ-A1940-S2(GZ-DC0003)	
①	Housing	1	PA66/PBT/PA9T	TDJ-A1940-S1(ST-DC0007)	

SYM	DISCRIPTION	DATE	APPROVED
△			
△			
△			
△			
△			

TACLEX TACLEX ELECTRONICS CO., LTD.

TOLERANCES UNLESS OTHERWISE SPECIFIED
LINEAR: ±0.30 ANGULAR: ±3°

REVISIONS	SCALE
A	5/1

SIGNATURES		DATE
DRAWN	Amy	2005.01.11
CHK'D	Alex	2005.01.11
APPV'D	Rex	2005.01.11

TITLE: DC POWER JACK

NO. TDJ-A1940